Pline Boolean

1030 kbadmin June 29, 2021 Unique function 0 5652

The Pline Boolean dialog box is displayed as shown in the following picture.

Menu: Express>Draw>Pline Boolean
Menu: Modify>Pline Boolean
Command Entry: GC_BoolOP

Delete the entity choosen by second selection: Choose whether to delete the second selected object. There are different Boolean operation options such as union, intersection and subtraction. After the operation the object will be a polyline.

Operation case:

Here, we use two boolean operations as shown below to complete the design of mechanical parts.

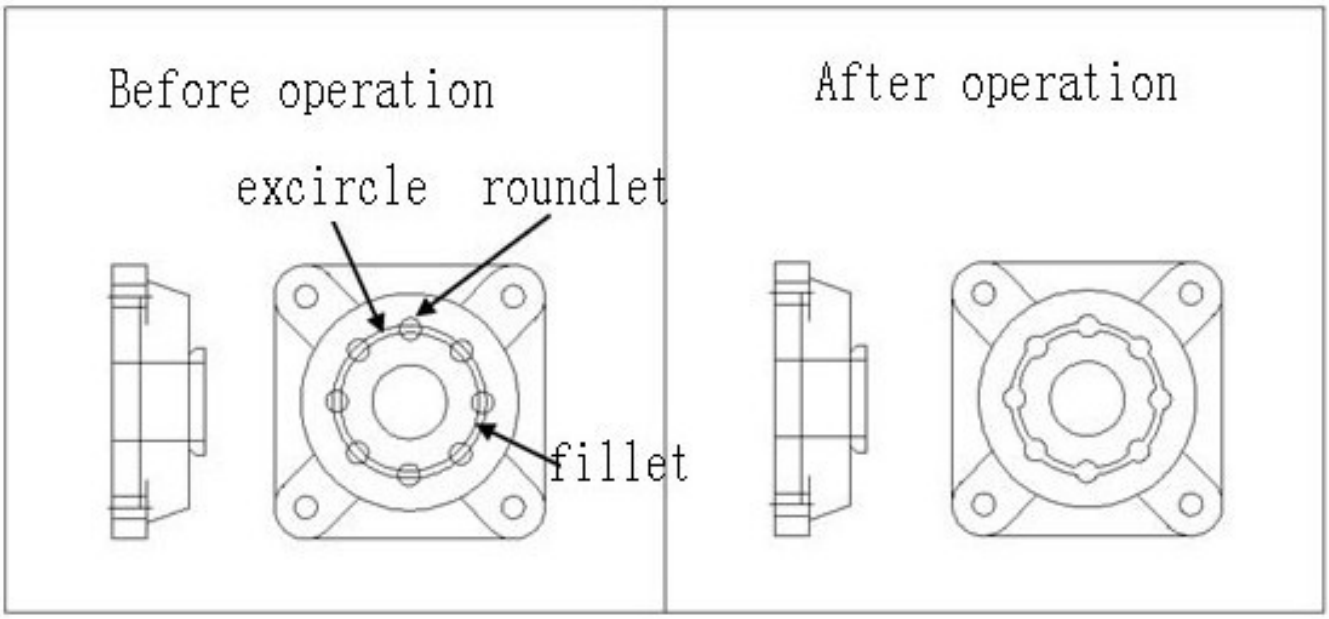

1.Start command, the dialog box will pop up;

2.Select the option "union" and uncheck the option "Delete the entity choosen by second selection", as shown below.

3.First select the exterior circle and then the small circles around it, it will keep all small circles around enabled for the next operation and you will get the first polyline as shown below;

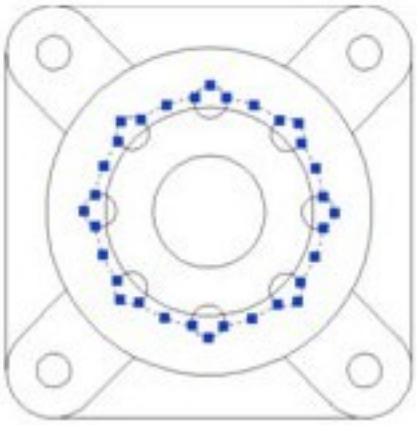

4.Start again the boolean operations, select option "subtraction" and check "Delete the entity choosen by second selection", as shown.

5.Then select the interior circle and then the small circles around it, then the small circles around it will be automatically deleted and you will get the final result as shown below.

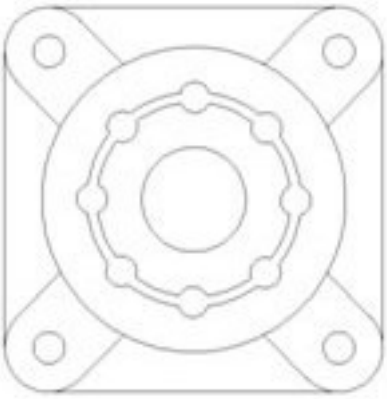

lt will be easier to complete this operation if you hide some of the other objects..

Online URL: https://www.kb2.gstarcad.com.my/article.php?id=1030